DISANO

125-41487200

MICRO RODIO L ASYM FLOODLIGHTS made of aluminium, anthrazite,transparent glass light output direct, tilting 180°, with converter, dimmability: not dimmable, cable black, IP66



Technical details

Light source	LED
System performance [W]	28
Luminous flux [lm]	3118
Colour temperature	4000K
CRI	>80
Optics	transparent glass
Converter	with converter
Dimmability	not dimmable
Light emission area	direct
Voltage	220-240V 50/60Hz
Length [mm]	145
Width [mm]	45
Height [mm]	227
IP protection class	IP66
IP protection class	protection cl. I
IK value	IK08
Material	aluminium
Colour of body	anthrazite
Cable	black
Lifetime [h]	50 000
Energy efficiency class	C
Net weight [kg]	1.17
EAN number	8012952151480

Sketch

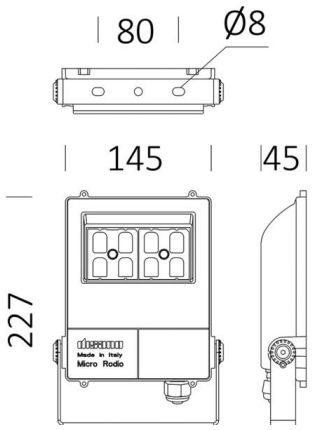

Light distribution curve

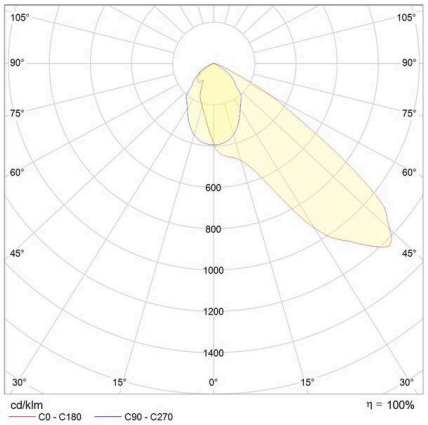

CE

The values are rated values. Power and luminous flux are initially subject to a tolerance of +/- 10%.
Colour temperature tolerance: +/- 150 K. The values apply to an ambient temperature of 25°C unless otherwise specified.