TCI

24-127490

PROFESSIONALE DALI 36 CONVERTER made of synthetic, dimmable DALI, IP20



Technical details

System performance [W]	16-38
Converter	with converter
Dimmability	DALI 2
Voltage	220-240V 50/60Hz
Length [mm]	147
Width [mm]	44
Height [mm]	30
IP protection class	IP20
IP protection class	protection cl. II
Material	synthetic
Number of luminaires B16A	50
Net weight [kg]	0.12
EAN number	8010703373471

Sketch

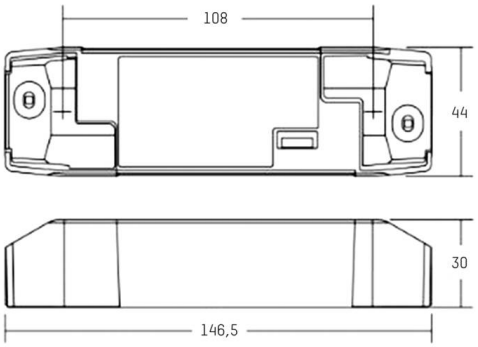

Light distribution curve

Einstellbar mittels DIP-SWITCH:

Konstantstrom

mA	W	V DC	mA	W	V DC
300	16	54	700	38	54
350	18	54	750	38	51
400	21	54	800	38	48
450	24	54	850	38	45
500	27	54	900	38	42
550	29	54	950	38	40
600	32	54	1000	38	38
650	35	54	1050	38	36

CE

The values are rated values. Power and luminous flux are initially subject to a tolerance of +/- 10%.

Colour temperature tolerance: +/- 150 K. The values apply to an ambient temperature of 25°C unless otherwise specified.