MOVA

495-720000000550

MOVA S GU10 TRACK TRACK SPOTLIGHT WITH 3 PH ADAPTER made of aluminium, white, similar to RAL 9016, decor white, light output direct, swiveling 350°, tilting 90°, dimmability: not dimmable, adapter/ceiling base white, IP20





Sketch

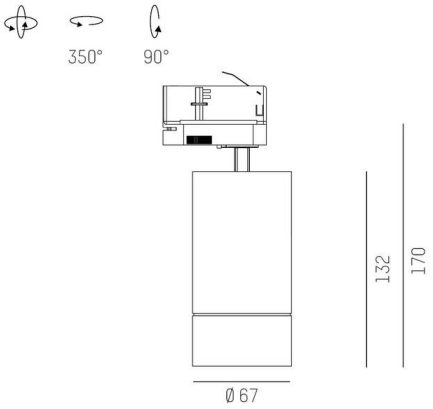

Technical details

Light source	QPAR 16 50W
Number of sockets	1x
Socket	GU10
Dimmability	not dimmable
Light emission area	direct
Voltage	220-240V 50/60Hz
Length [mm]	87
Height [mm]	170
Diameter [mm]	67
IP protection class	IP20
IP protection class	protection cl. II
Material	aluminium
Colour of body	white
RAL	9016
Colour of adapter / ceiling base	white
Colour of decor	white
Net weight [kg]	0.39
EAN number	9010506235524

Energy label

The values are rated values. Power and luminous flux are initially subject to a tolerance of +/- 10%.
Colour temperature tolerance: +/- 150 K. The values apply to an ambient temperature of 25°C unless otherwise specified.