ONLY

619-00201024305v2

ONLY M R RECESSED SPOTLIGHT made of metal, white, similar to RAL 9016,high-efficiently vacuum deposited aluminium reflector beam 17°, light output direct, swiveling 355°, tilting 30°, without converter, max. 700/900/1050mA, dimmability: see converter, IP20





Sketch

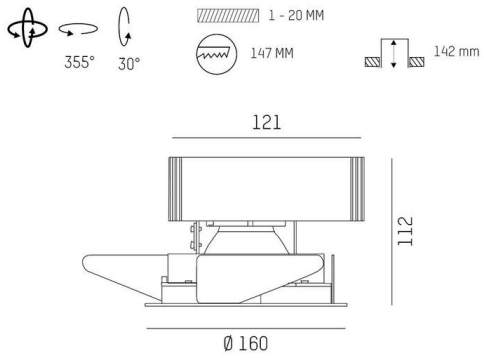

Technical details

Light source	LED 23W/30W/36W
Luminous flux [lm]	2740/3430/3910
Current sec. [mA]	700/900/1050
Colour temperature	2700K
CRI	PREMIUM>90
Optics	vacuum deposited aluminium reflector
Converter	without converter
Dimmability	see converter
Light emission area	direct
Beam angle	17°
Height [mm]	112
Diameter [mm]	160
Ceiling cutout [mm]	147
Ceiling thickness [mm]	1-20
Mounting depth [mm]	142
IP protection class	IP20
IP protection class	protection cl. II
Material	metal
Colour of body	white
RAL	9016
Lifetime [h]	L80 B10 50 000
Energy efficiency class	E
Net weight [kg]	0.79
EAN number	9010870135789

Light distribution curve

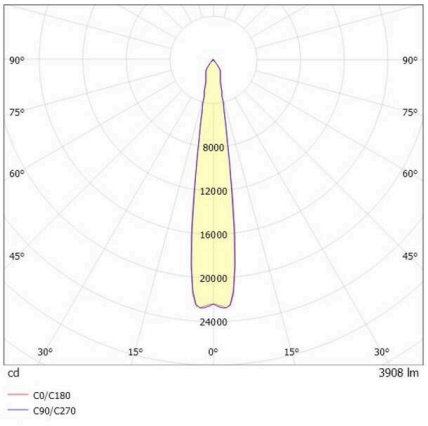

Energy label

CE

The values are rated values. Power and luminous flux are initially subject to a tolerance of +/- 10%.
Colour temperature tolerance: +/- 150 K. The values apply to an ambient temperature of 25°C unless otherwise specified.