SAVO

633-00502082405v1

SAVO 20 S SQUARE DOUBLE R RECESSED SPOTLIGHT made of aluminium, white, similar to RAL 9016,high-efficiently vacuum deposited aluminium reflector beam 45°, light output direct, swiveling 355°, tilting 30°, without converter, max. 350/500mA, dimmability: see converter, IP20



Technical details

Light source	LED 12/18W
Number of sockets	2x
Luminous flux [lm]	3100/4220
Current sec. [mA]	350/500
Colour temperature	4000K
CRI	>90
Optics	vacuum deposited aluminium reflector
Converter	without converter
Dimmability	see converter
Light emission area	direct
Beam angle	45°
Length [mm]	250
Width [mm]	134
Height [mm]	113
Ceiling cutout [mm]	230x115
Ceiling thickness [mm]	1-25
Mounting depth [mm]	149
IP protection class	IP20
IP protection class	protection cl. II
Material	aluminium
Colour of body	white
RAL	9016
Lifetime [h]	L80 B10 50 000
Energy efficiency class	D
Net weight [kg]	0.58
EAN number	9010506113839

Sketch

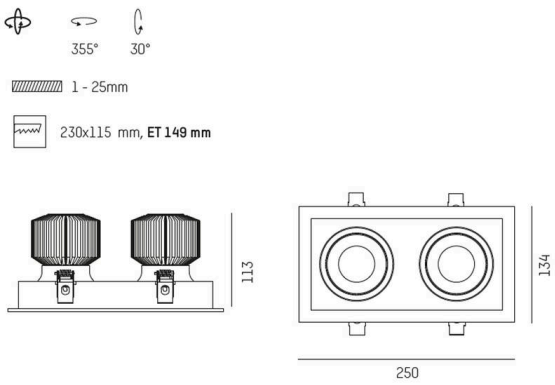

Energy label

Light distribution curve

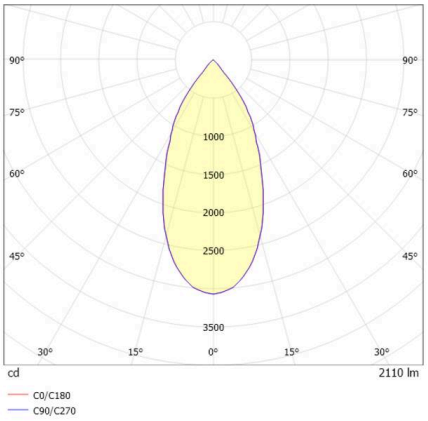

CE

The values are rated values. Power and luminous flux are initially subject to a tolerance of +/- 10%.
Colour temperature tolerance: +/- 150 K. The values apply to an ambient temperature of 25°C unless otherwise specified.