HENDRIK

590-011120100s600

HENDRIK M W SURFACE MOUNTED WALL LUMINAIRE made of aluminium, black, similar to RAL 9005, decor blue,Decorative felt panel made of synthetic polymers OEKO-TEX Standard 100 beam 170°, light output direct / indirect, with converter, dimmability: not dimmable, IP20 Flame retardant according to DIN EN 13501 B-s2, d0,



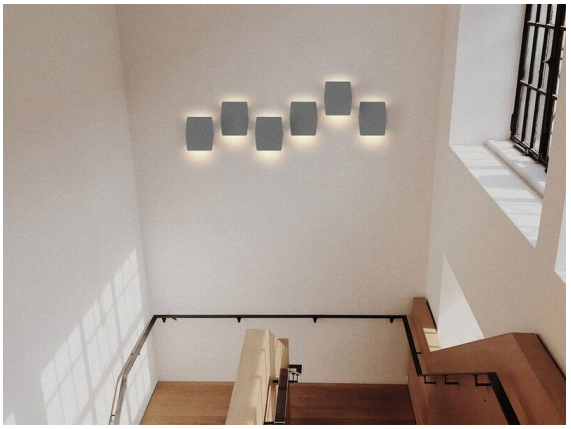

Sketch

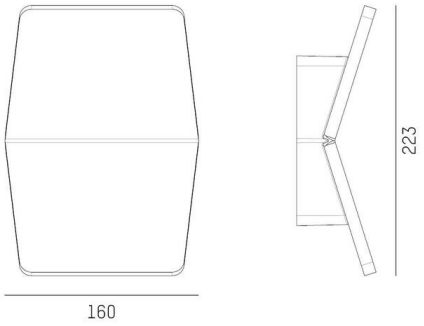

Technical details

Light source	LED
System performance [W]	13
Luminous flux [lm]	350
Colour temperature	2700/3000K
CRI	>90
Optics	Decorative felt panel made of synthetic polymers
Converter	with converter
Dimmability	not dimmable
Light emission area	direct / indirect
Beam angle	170°
Voltage	220-240V 50/60Hz
Width [mm]	160
Height [mm]	223
Protrusion [mm]	63
IP protection class	IP20
IP protection class	protection cl. I
Material	aluminium
Colour of body	black
RAL	9005
Colour of decor	blue
Lifetime [h]	L80 B10 50 000
Energy efficiency class	E
Net weight [kg]	0.50
EAN number	9010506466164

Light distribution curve

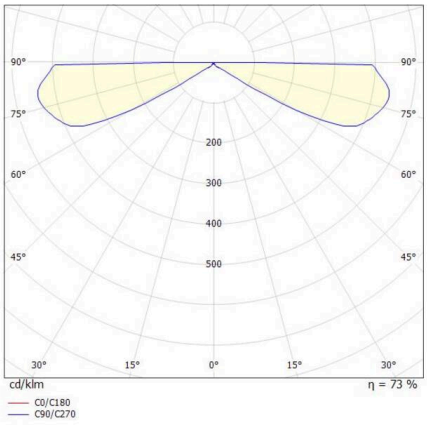

Energy label

CE

The values are rated values. Power and luminous flux are initially subject to a tolerance of +/- 10%.
Colour temperature tolerance: +/- 150 K. The values apply to an ambient temperature of 25°C unless otherwise specified.