RIDE SYSTEM

577-00104002408d

RIDE SYSTEM INSERT LIGHT INSERT made of die-cast aluminium, light output direct, with converter, dimmability: DALI, through wiring 3x0,75mm² + 2x0,5mm², IP20





Sketch

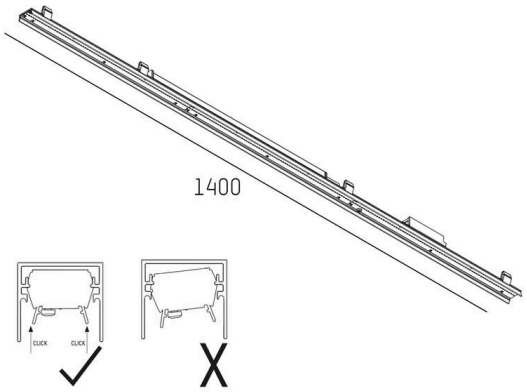

Technical details

Light source	LED
System performance [W]	24
Luminous flux [lm]	2930
Colour temperature	4000K
CRI	>90
Converter	with converter
Dimmability	DALI
Light emission area	direct
Voltage	220-240V 50/60Hz
Through wiring	3x0,75mm² + 2x0,5mm²
Length [mm]	1400
IP protection class	IP20
IP protection class	protection cl. I
Material	die-cast aluminium
Lifetime [h]	L80 B10 50 000
Energy efficiency class	E
Net weight [kg]	1.26
EAN number	9008905689246

Energy label

CE

The values are rated values. Power and luminous flux are initially subject to a tolerance of +/- 10%.
Colour temperature tolerance: +/- 150 K. The values apply to an ambient temperature of 25°C unless otherwise specified.