RIDE SYSTEM

577-001030029080

RIDE SYSTEM INSERT LIGHT INSERT made of die-cast aluminium, light output direct, with converter, dimmability: not dimmable, through wiring 3x0,75mm², IP20





Sketch

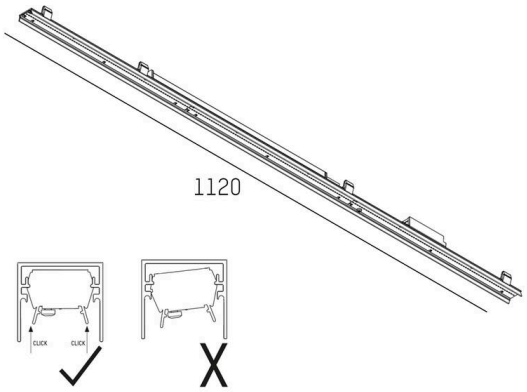

Technical details

Light source	LED
System performance [W]	19
Luminous flux [lm]	2260
Colour temperature	3000K
CRI	>90
Converter	with converter
Dimmability	not dimmable
Light emission area	direct
Voltage	220-240V 50/60Hz
Through wiring	3x0,75mm²
Length [mm]	1120
IP protection class	IP20
IP protection class	protection cl. I
Material	die-cast aluminium
Lifetime [h]	L80 B10 50 000
Energy efficiency class	E
Net weight [kg]	2.08
EAN number	9008905689147

Energy label

CE

The values are rated values. Power and luminous flux are initially subject to a tolerance of +/- 10%.
Colour temperature tolerance: +/- 150 K. The values apply to an ambient temperature of 25°C unless otherwise specified.