## RIDE SYSTEM

## 577-001030023080

RIDE SYSTEM INSERT LIGHT INSERT made of die-cast aluminium, light output direct, with converter, dimmability: not dimmable, through wiring 3x0,75mm², IP20





### Sketch

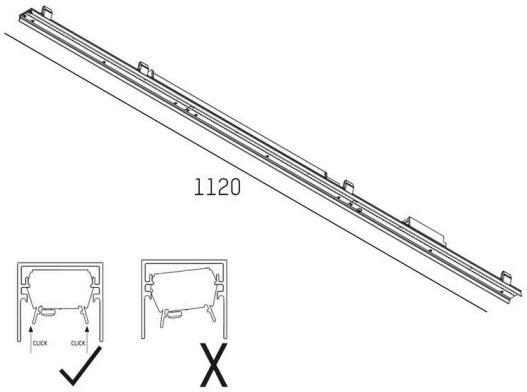


### Technical details

| | |
|---|---|
| Light source | LED |
| System performance [W] | 19 |
| Luminous flux [lm] | 2070 |
| Colour temperature | 2700K |
| CRI | >90 |
| Converter | with converter |
| Dimmability | not dimmable |
| Light emission area | direct |
| Voltage | 220-240V 50/60Hz |
| Through wiring | 3x0,75mm² |
| | |
| Length [mm] | 1120 |
| IP protection class | IP20 |
| IP protection class | protection cl. I |
| | |
| Material | die-cast aluminium |
| Lifetime [h] | L80 B10 50 000 |
| Energy efficiency class | E |
| | |
| Net weight [kg] | 2.08 |
| EAN number | 9008905689284 |

Energy label

CE

The values are rated values. Power and luminous flux are initially subject to a tolerance of +/- 10%.
Colour temperature tolerance: +/- 150 K. The values apply to an ambient temperature of 25°C unless otherwise specified.