## DARK NIGHT

**579-00203082906**

DARK NIGHT LENS 3 R RECESSED SPOTLIGHT made of aluminium, black, similar to RAL 9005, decor black lacquer,high-efficiently vacuum deposited aluminium reflector beam 36°, light output direct, UGR <16, without converter, max. 1050mA, dimmability: see converter, IP20

### Sketch

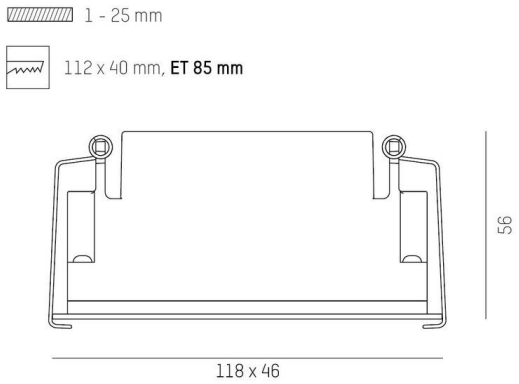


### Light distribution curve

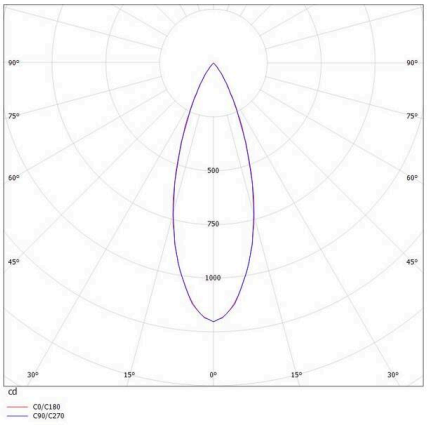


### Technical details

| | |
|---|---|
| Light source | LED 9W |
| Luminous flux [lm] | 650 |
| Current sec. [mA] | 1050 |
| Colour temperature | 3000K |
| CRI | >90 |
| UGR | <16 |
| Optics | vacuum deposited aluminium reflector |
| Converter | without converter |
| Dimmability | see converter |
| Light emission area | direct |
| Beam angle | 36° |
| Length [mm] | 118 |
| Width [mm] | 46 |
| Height [mm] | 56 |
| Ceiling cutout [mm] | 112x40 |
| Ceiling thickness [mm] | 1-25 |
| Mounting depth [mm] | 85 |
| IP protection class | IP20 |
| IP protection class | protection cl. II |
| IK value | IK06 |
| Material | aluminium |
| Colour of body | black |
| RAL | 9005 |
| Colour of decor | black lacquer |
| Lifetime [h] | L80 B10 50 000 |
| Energy efficiency class | F |
| Net weight [kg] | 0.32 |
| EAN number | 9010506246810 |

Energy label

CE

The values are rated values. Power and luminous flux are initially subject to a tolerance of +/- 10%.
Colour temperature tolerance: +/- 150 K. The values apply to an ambient temperature of 25°C unless otherwise specified.