DARK NIGHT

579-00202082905

DARK NIGHT LENS 3 R RECESSED SPOTLIGHT made of aluminium, white, similar to RAL 9016, decor grey,high-efficiently vacuum deposited aluminium reflector beam 36°, light output direct, UGR <16, without converter, max. 1050mA, dimmability: see converter, IP20

Sketch

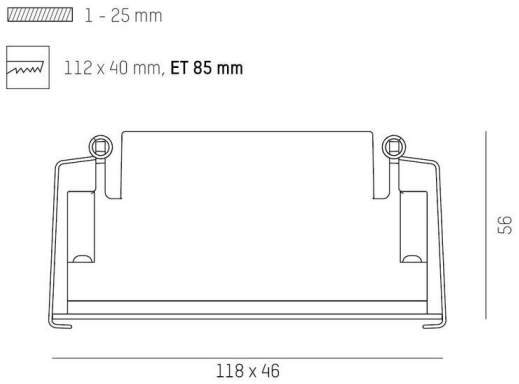

Light distribution curve

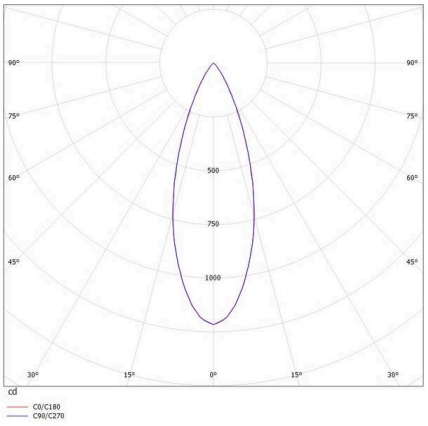

Technical details

Light source	LED 9W
Luminous flux [lm]	690
Current sec. [mA]	1050
Colour temperature	3000K
CRI	>90
UGR	<16
Optics	vacuum deposited aluminium reflector
Converter	without converter
Dimmability	see converter
Light emission area	direct
Beam angle	36°
Length [mm]	118
Width [mm]	46
Height [mm]	56
Ceiling cutout [mm]	112x40
Ceiling thickness [mm]	1-25
Mounting depth [mm]	85
IP protection class	IP20
IP protection class	protection cl. II
IK value	IK06
Material	aluminium
Colour of body	white
RAL	9016
Colour of decor	grey
Lifetime [h]	L80 B10 50 000
Energy efficiency class	F
Net weight [kg]	0.32
EAN number	9010506236767

Energy label

CE

The values are rated values. Power and luminous flux are initially subject to a tolerance of +/- 10%.
Colour temperature tolerance: +/- 150 K. The values apply to an ambient temperature of 25°C unless otherwise specified.