MOLTO LUCE®

KODA

333-00062

KODA TWENTY TWO SURFACE MOUNTED WALL LUMINAIRE made of aluminium, anthrazite, similar to RAL 7016, light output direct / indirect, with converter, dimmability: on/off, IP65

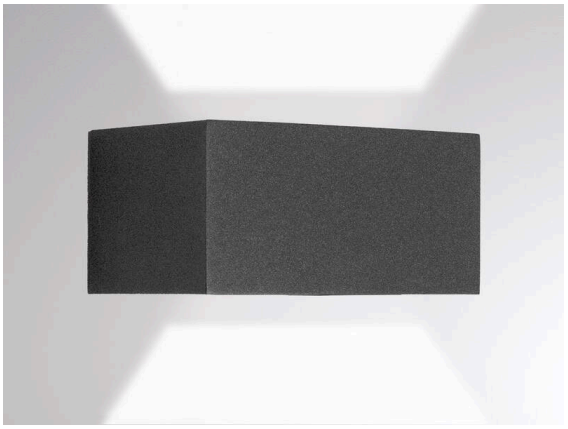

SKETCH

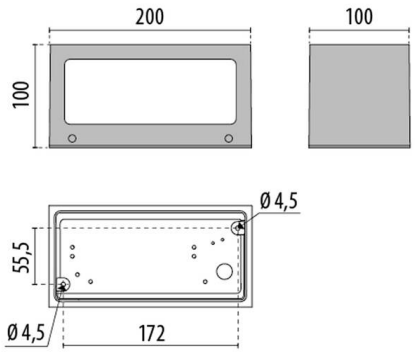

LIGHT DISTRIBUTION CURVE

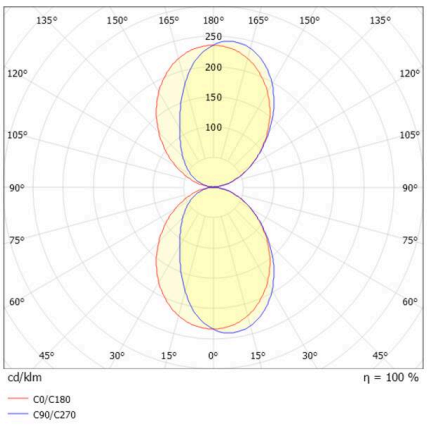

TECHNICAL DETAILS

Light source	LED
System performance [W]	20
Luminous flux [lm]	2x465
Colour temperature	3000K
CRI	>80
Converter	with converter
Dimmability	on/off
Light emission area	direct / indirect
Voltage	220-240V 50/60Hz
Length [mm]	200
Width [mm]	100
Height [mm]	100
IP protection class	IP65
IP protection class	protection cl. I
IK value	IK06
Material	aluminium
Colour of body	anthrazite
RAL	7016
Lifetime [h]	L80 B10 50 000
Ambient temperature	from -20° to +35°
Energy efficiency class	D
Number of luminaires B16A	24
Net weight [kg]	1.65
EAN number	9010870574984

Energy label

CE

The values are rated values. Power and luminous flux are initially subject to a tolerance of +/- 10%.
Colour temperature tolerance: +/- 150 K. The values apply to an ambient temperature of 25°C unless otherwise specified.