MAGIS

222-00152

MAGIS TRACK TRACK SPOTLIGHT WITH 3 PH ADAPTER made of aluminium, white, similar to RAL 9003,high-efficiently vacuum deposited synthetic reflector beam 36°, light output direct, UGR <22, swiveling 350°, tilting 90°, with converter, max. 500mA, dimmability: on/off, IP20





Sketch

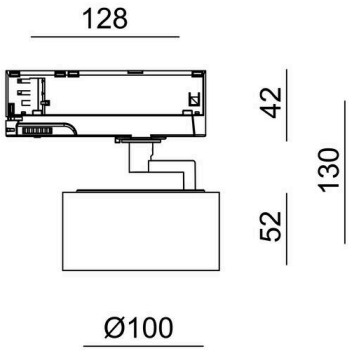

Technical details

Light source	LED
System performance [W]	16
Luminous flux [lm]	1160
Current sec. [mA]	500
Colour temperature	2700K
CRI	>90
UGR	<22
Optics	vacuum deposited synthetic reflector
Converter	with converter
Dimmability	on/off
Light emission area	direct
Beam angle	36°
Voltage	220-240V 50/60Hz
Height [mm]	130
Diameter [mm]	100
IP protection class	IP20
IP protection class	protection cl. II
IK value	IK02
Material	aluminium
Colour of body	white
RAL	9003
Lifetime [h]	L80 B10 50 000
Energy efficiency class	F
Number of luminaires B16A	48
Net weight [kg]	0.50
EAN number	9010870561434

Light distribution curve

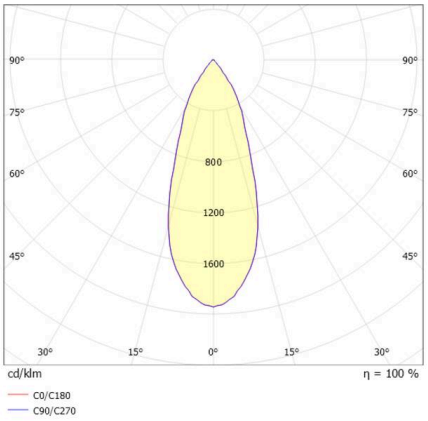

Energy label

CE

The values are rated values. Power and luminous flux are initially subject to a tolerance of +/- 10%.
Colour temperature tolerance: +/- 150 K. The values apply to an ambient temperature of 25°C unless otherwise specified.